ENGINE

86U01X-501

OUTLINE

OUTLINE OF CONSTRUCTION

The New 626 is equipped with an F2 2.2 liter engine. This engine is based on the previous 626 FE engine, with increased displacement. The engine features three valves per cylinder and a new timing belt layout.

Main Changes:

1. The piston stroke is increased for greater displacement.
2. Intake and exhaust efficiency is improved through the use of two smaller intake valves and one larger exhaust valve per cylinder, for an increase of total valve area.
3. The timing belt layout is changed for improved durability and noise reduction.
4. A stiffener is used between the cylinder block and the oil pan to lessen noise and improve performance.
5. The cylinder block and crankshaft strength is improved to meet the higher power output.
6. Hydraulic lash adjusters are used to reduce noise, thus the valve clearance is made maintenance-free.

STRUCTURAL VIEW

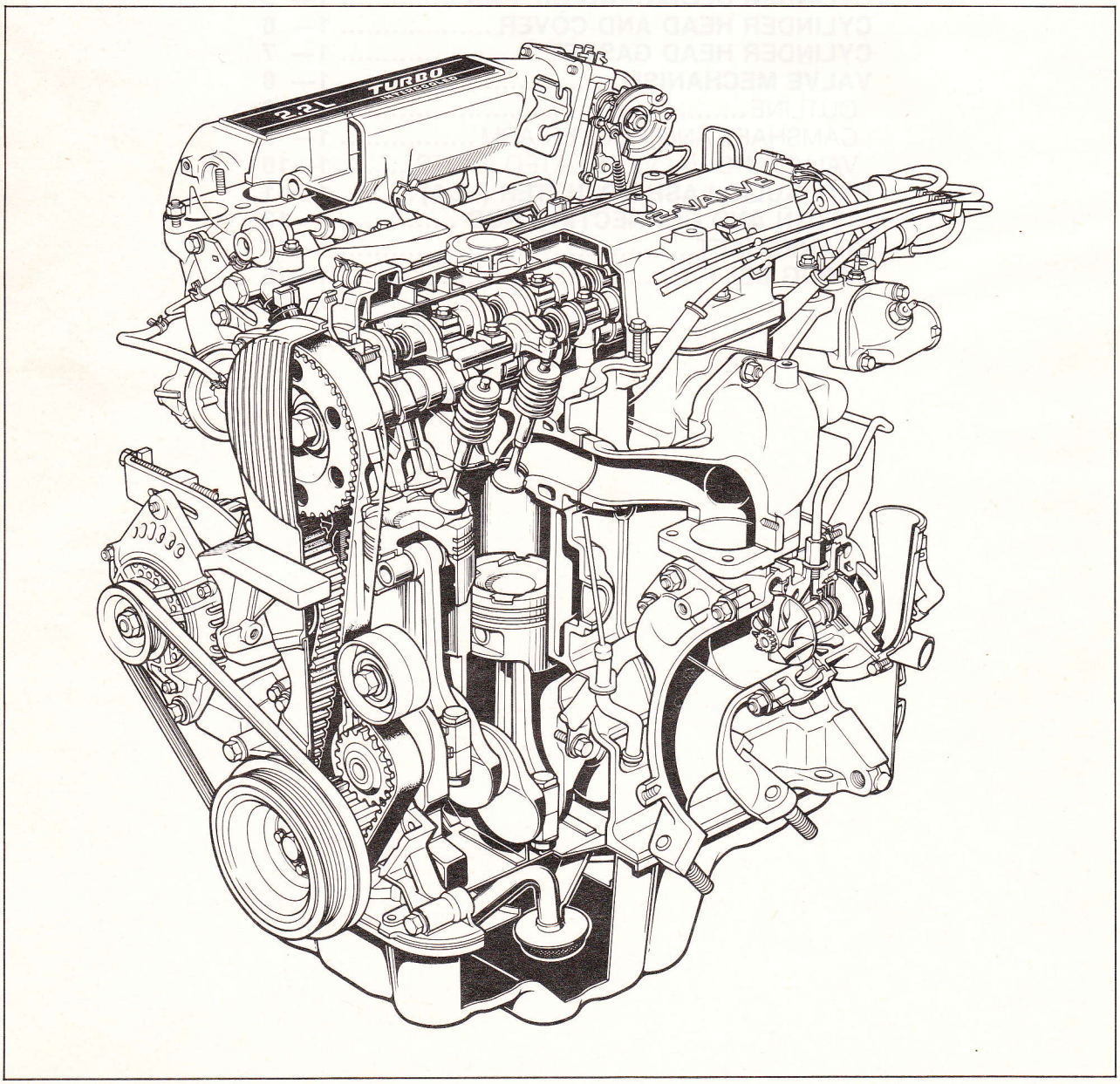

86U01X-502

SPECIFICATIONS

Item \ Engine model			F2 Turbo	F2 Non-Turbo	FE Turbo	FE Non-Turbo
Type			Gasoline, 4-cycle			
Cylinder arrangement and number			In line, 4-cylinders			
Combustion chamber			Pentroof		Multispherical	
Valve system			OHC, belt driven			
Displacement cc (cu in)			2,184 (133.2)		1,998 (121.9)	
Bore and stroke mm (in)			86.0 x 94.0 (3.39 x 3.70)		86.0 x 86.0 (3.39 x 3.39)	
Compression ratio			7.8 : 1	8.6 : 1	7.8 : 1	8.6 : 1
Compression pressure kPa (kg/cm², psi)—rpm			961 (9.8, 139) —260	1,118 (11.4, 162) —270	1,078 (11.0, 156) —270	1,128 (11.5, 164) —270
Valve timing	IN	Open BTDC	10°		16°	
		Close ABDC	49°		54°	
	EX	Open BBDC	55°		54°	
		Close ATDC	12°		16°	
Valve clearance (warm engine)	Valve side	IN mm (in)	0: Maintenance-free		0.30 (0.012)	
		EX mm (in)	0: Maintenance-free		0.30 (0.012)	
Idle speed rpm		MTX	750 ± 25		800 $^{+50}_{-0}$	
		ATX (in "N" range)	750 ± 25		900 $^{+50}_{-0}$	
Ignition timing BTDC			9 ± 1°	6° ± 1°		
Firing order			1—3—4—2			

86U01X-503

INTERCHANGEABILITY

The following chart shows the interchangeability of the main parts of the new F2 engine and the previous FE engine in the 626.

○.....Interchangeable X.....Not interchangeable
△.....F2 engine parts can be used on FE engine, but reverse usage impossible.

Part name		Interchangeability	Remark
Cylinder block related	Cylinder block	X	1. Strengthened cylinder block 2. Increased block height 3. Oil control plug added
	Cylinder head	X	Three-valve configuration
	Cylinder head gasket	X	Redesigned coolant and lubricant passages
	Cylinder head cover	X	New design
	Oil pan	X	Shape changed
	Vibration reducing stiffener	X	Newly added between cylinder block and oil pan
	Timing belt cover	X	Enlarged
	Front housing	X	Shape changed
	Front oil seal	△	Increased heat-resistance
	Rear oil seal	○	
Crankshaft related	Crankshaft	X	1. Increased crank pin offset for longer stroke 2. Increased counter weight width
	Main bearing	X	Oil hole elliminated
	Connecting rod and cap	X	1. Increased length 2. Strengthened cap 3. Increased bolt size
	Crank pin bearing	○	
	Piston	X	1. Redesigned valve recess 2. Land width increased
	Piston pin	○	
	Piston ring	△	Increased reliability
	Flywheel	X	Increased inertia weight
Timing belt related	Timing belt	X	New design 1. Changed timing belt layout 2. Increased timing belt width 3. Idler pulley added
	Timing belt pulley		
	Timing belt tensioner		
	Camshaft pulley		
Valve related	Camshaft	X	New design 1. Changed to three valve layout 2. HLA used at rocker arm 3. Changed rocker arm shaft mounting
	Rocker arm		
	Rocker arm shaft		
	Valve		
	Valve spring and seat		
	Valve guide		
	Valve seal		
Lubrication related	Oil pump	X	1. Changed body shope 2. Changed to trochoid gear type 3. Increased gear width
	Oil strainer	X	Shape changed
	Oil filter	○	
Cooling related	Water pump	X	1. Changed body shape 2. Changed from two piece shaft and seal to one piece seal
	Thermostat	○	

86U01X-504

CYLINDER BLOCK AND OIL PAN

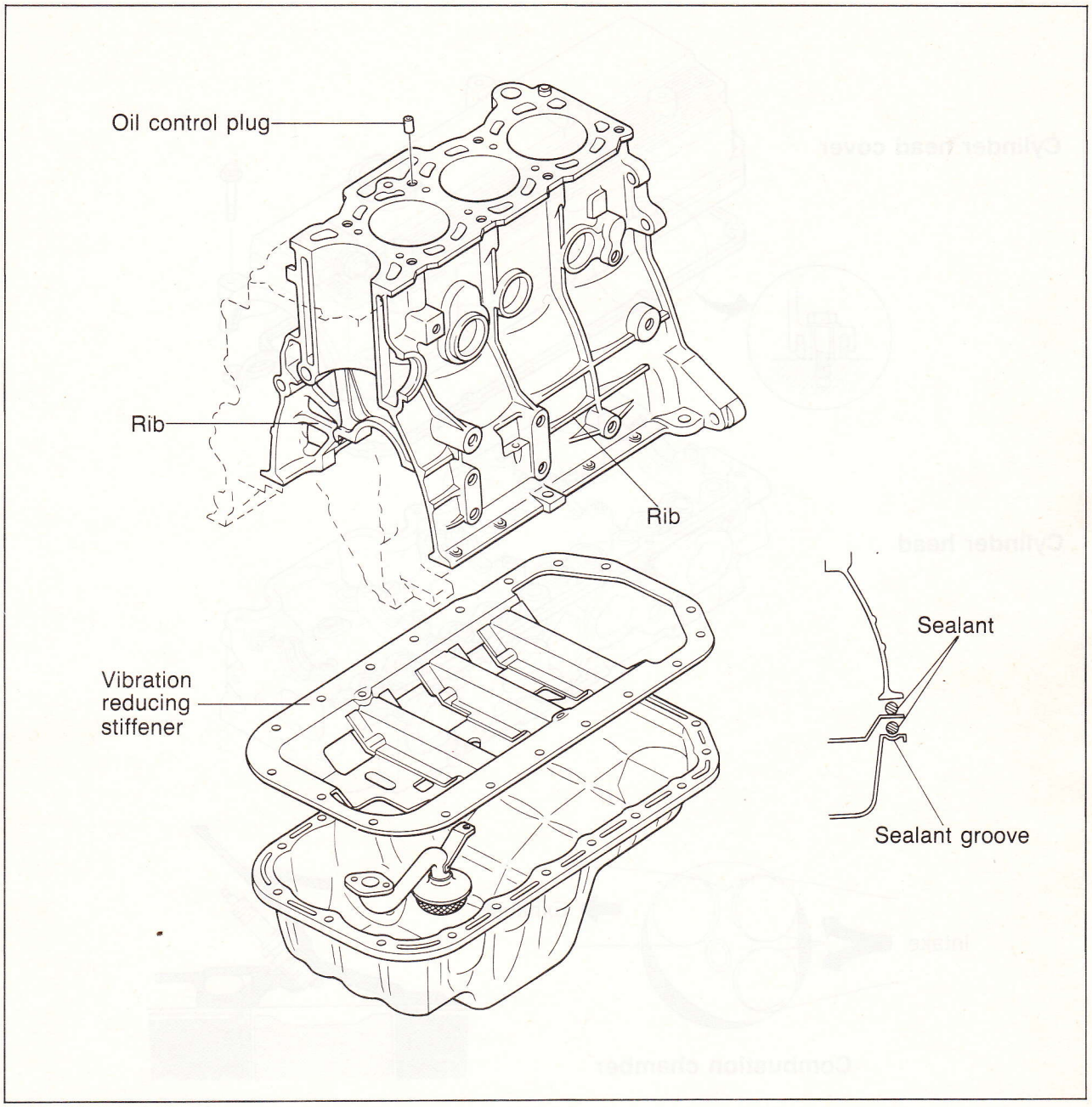

86U01X-505

1. The rigidity of the cylinder block is increased to reduce engine vibration.
   - Width of the strengthening ribs on the cylinder block is increased.
   - Ribs around the crankshaft journals are reinforced or added for extra strength.
2. Instead of an oil orifice in the cylinder head gasket, an oil control plug is installed in the cylinder block for improved sealing.
   This controls oil flow to the valve mechanism.
3. A vibration reducing stiffener is secured between the cylinder block and oil pan, reinforcing the block.
   To prevent oil leakage when servicing, sealant must be applied to both sides of the stiffener.

CYLINDER HEAD AND COVER

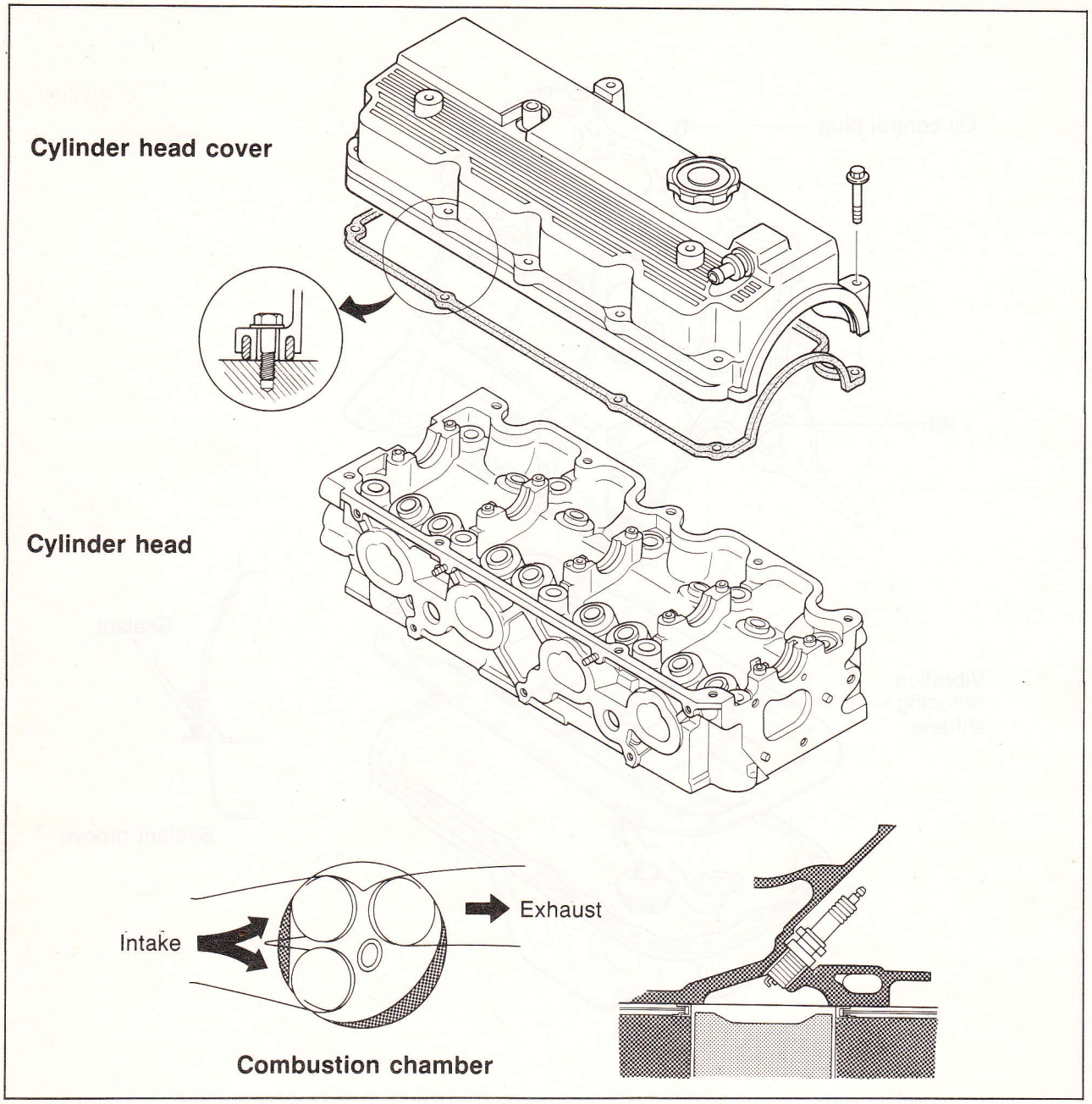

86U01X-506

Cylinder Head

1. A three-valve, single overhead camshaft layout, with two small intake valves and one large exhaust valve per cylinder, is used.
2. The combustion chamber is a pentroof type. Squish areas are created at the outside edge of the piston to increase cylinder turbulence and improve mixing of the air and fuel.
3. In conjunction with the three-valve layout, the spark plug is located more to the center of the combustion chamber, increasing combustion efficiency.

Cyinder Head Cover

To enhance sealing, the cylinder head cover is mounted differently.

1. The cylinder head cover is changed from full-floating type to semi-floating type.
2. The cover mounting bolt washer seal is eliminated to prevent the bolt from loosening.

CYLINDER HEAD GASKET

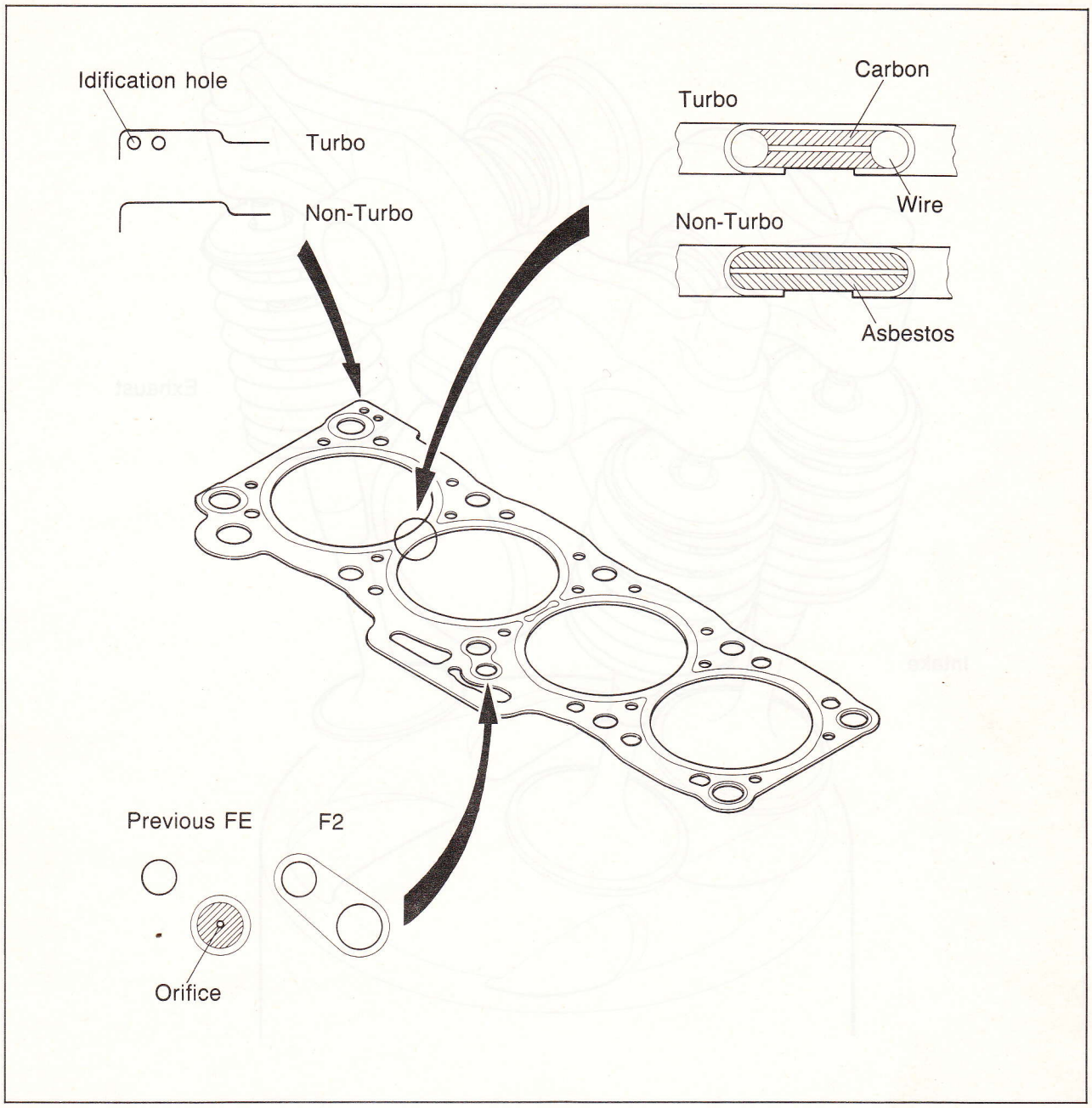

86U01X-507

1. The cylinder head gasket used on the Turbo engine is made of carbon, and that used on the Non-Turbo engine is made of asbestos.
2. These do not have the oil orifice. Instead they are for use on engines with an oil control plug passed into the cylinder block. Therefore, there is no interchangeability with the previous FE Turbo or Non-Turbo engine.
3. As the carbon gasket used for the Turbo engine has enhanced sealing ability, it can be used on the Non-Turbo engine. But usage of the Non-Turbo gasket on the Turbo engine is not possible For idification, there are small holes in the Turbo gasket.

VALVE MECHANISM

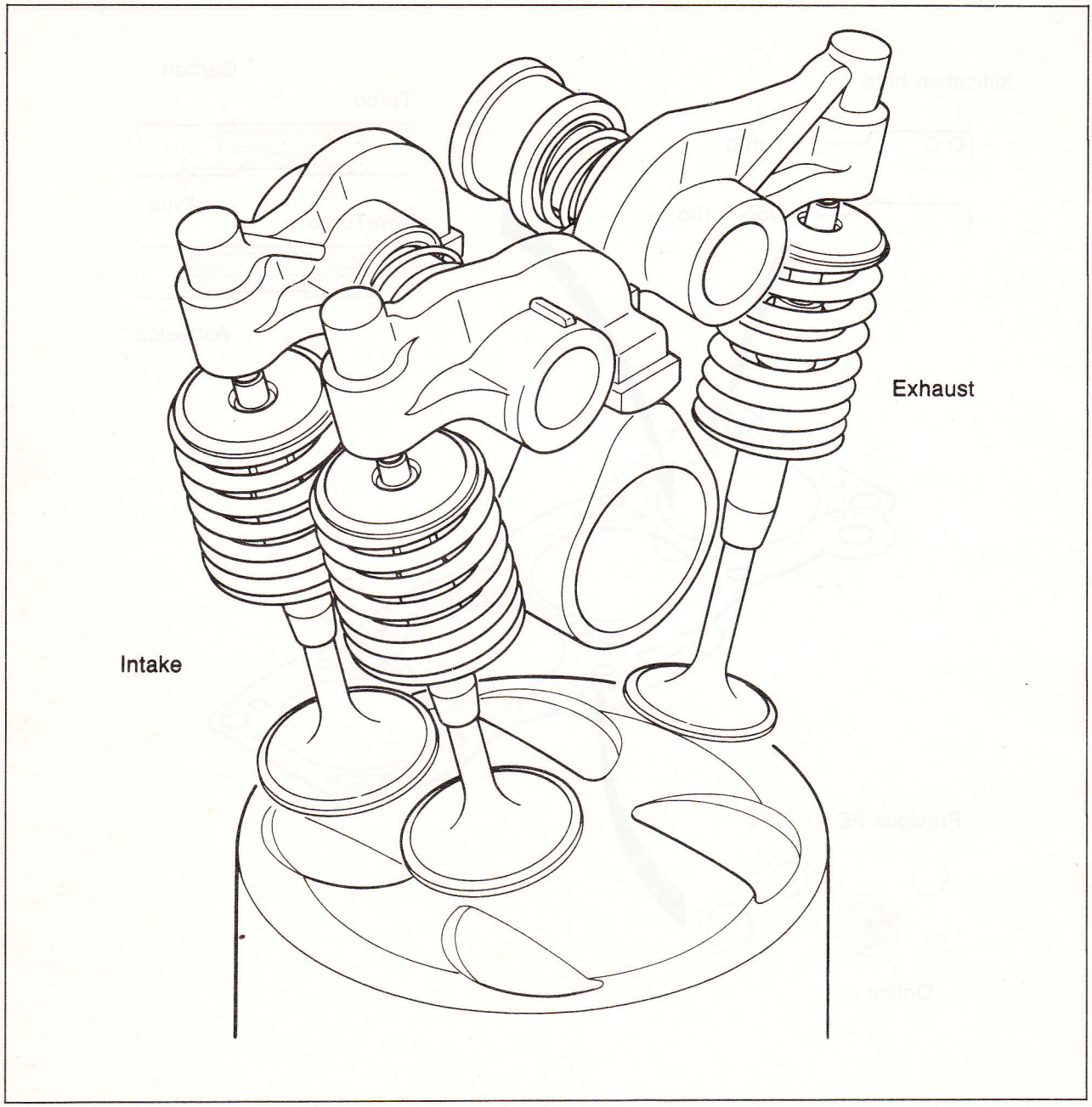

86U01X-508

OUTLINE

There are two intake valves and one exhaust valve per cylinder that are operated by the camshaft through the rocker arms.
By employing two 32.5 mm (1.28 in) intake valves instead of the one 44 mm (1.73 in) valve, the total intake valve area is increased, improving air intake efficiency.

The various parts of the valve mechanism are newly designed, and there is no interchangeability with the FE engine.

CAMSHAFT AND ROCKER ARM

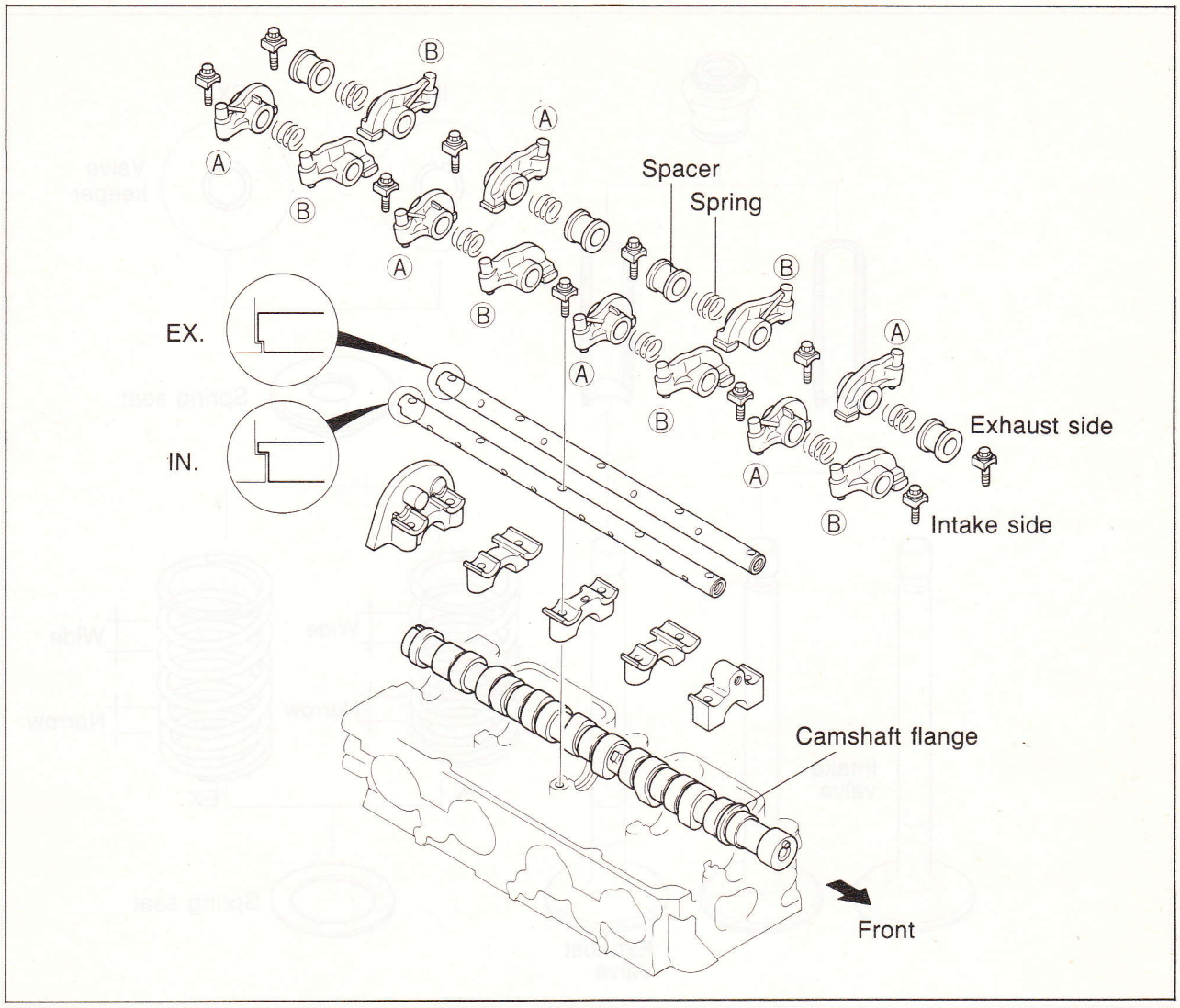

86U01X-509

Camshaft
End play is controlled by the flange of the No. 1 camshaft journal cap, the same as in the FE engine.

Camshaft Cap
The camshaft caps are integral-bearing types. They are secured together with the rocker arm shafts.

Rocker Arm Shaft
1. The position of the rocker arm lubrication hole is different at the intake and exhaust sides. Both rocker arm shaft assemblies must be assembled so that the rear of the shaft aligns with the rear camshaft cap.
2. Identical rocker arm springs are used for both the intake and exhaust sides. Spacers are used on the exhaust side.
3. Be careful that the rocker arms or spacer **do not get caught** between the shaft and camshaft cap.

Rocker Arm
1. There are two shapes of rocker arms (A and B). Six of each are used as shown in the figure.
2. A hydraulic lash adjuster (HLA) is used at each rocker arm to maintain the valve clearance at 0mm. (For operation of the HLA, refer to page 1—11.)

VALVE AND VALVE RELATED PARTS

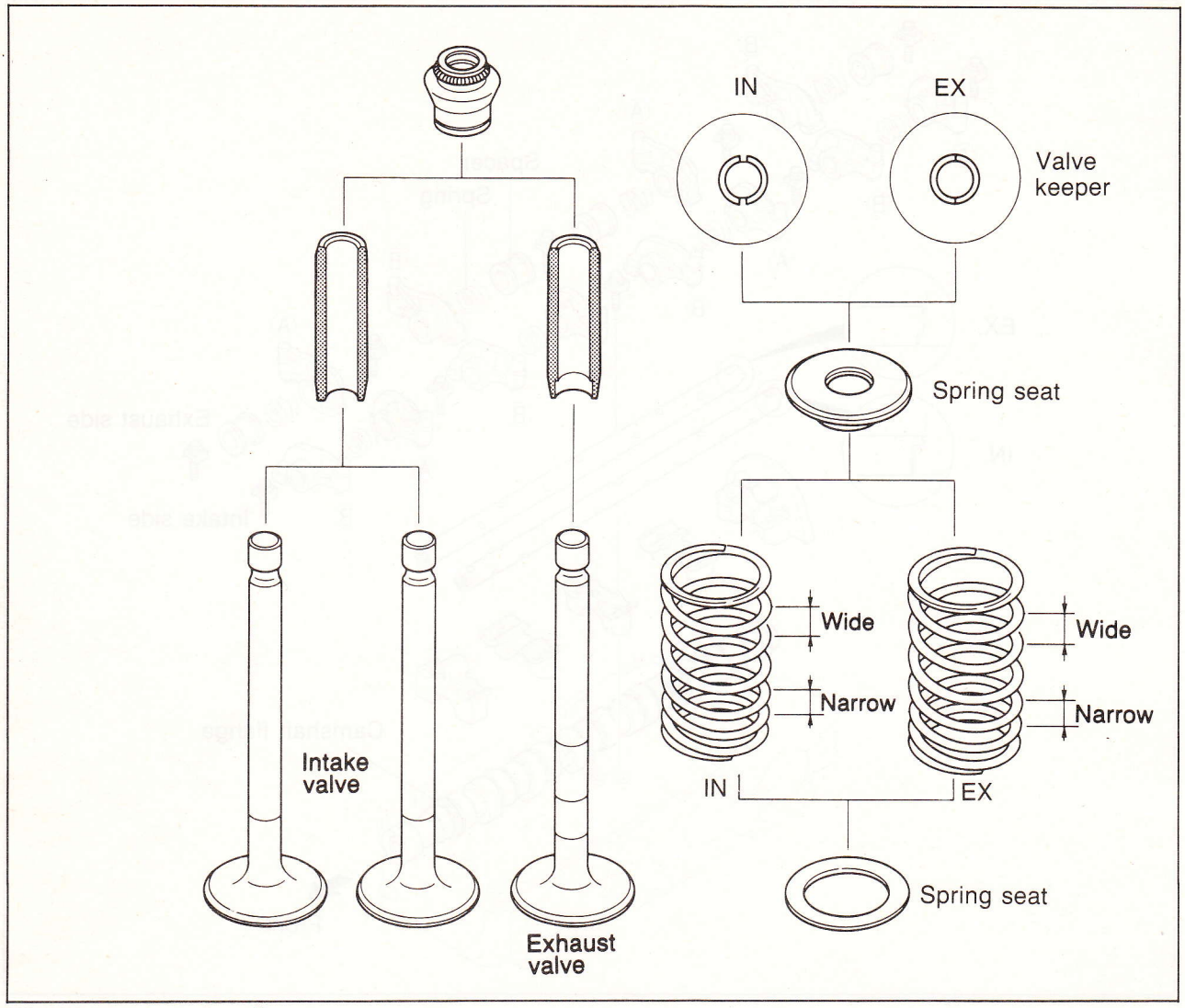

86U01X-510

Valve and Valve Spring

1. The intake and exhaust valves are different. The two intake valves are interchangeable.
2. The intake and exhaust valve springs are different. Both springs are an unequal pitch type, and installed with the narrow pitch downward towards the cylinder head.
3. The intake and exhaust valve spring seats (upper and lower) are interchangeable.

Valve Guide

The valve guides are different for intake and exhaust. On the exhaust valve guide there is a relief where the guide protrudes into the exhaust port to prevent carbon build-up. As replacement parts for servicing, only the exhaust guide is available. It is used for both the intake and exhaust sides.

Valve Seal

The valve seals are the same for intake and exhaust. But they are different from those used for the FE engine. Use the **valve seal pusher** (49 H012 009) for installation.

Valve Keeper

The valve keepers for the intake valves are a fixed type, and the ones for the exhaust valves are a floating type to provide valve rotation.

HYDLAULIC LASH ADJUSTER (HLA)

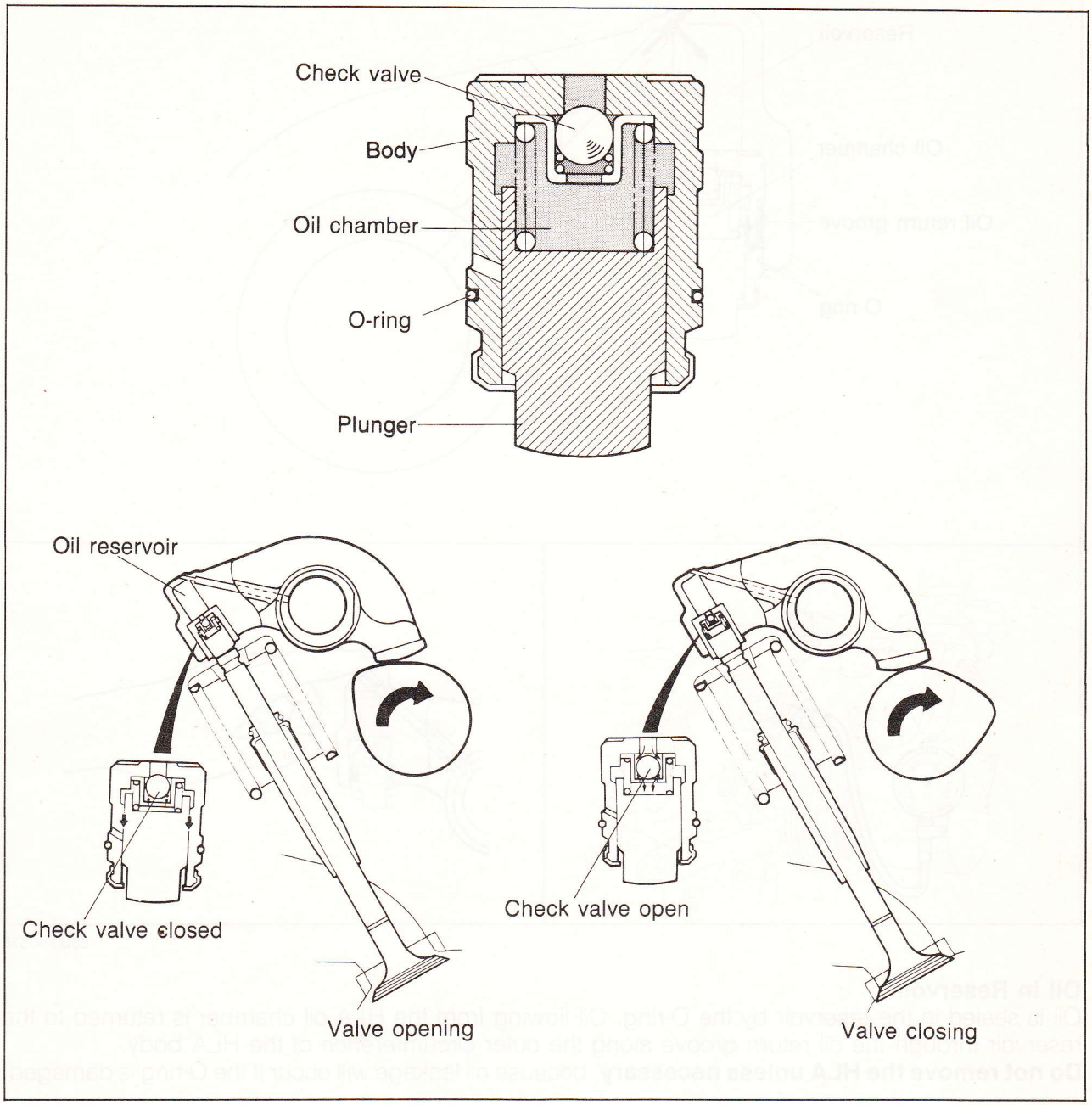

86U01X-511

The HLA in the rocker arm automatically maintains 0 mm valve clearance at all times. The result is that tappet noise is eliminated and there is no need for periodical adjustment of valve clearance. The HLA is composed of the body, plunger, and check ball. The oil reservoir and oil chamber are filled with oil.

Operation

Valve opening.....When the rocker arm pushed the HLA, the check ball seals the oil chamber, and because the oil can not be compressed, the body and plunger move as an unit to open the valve. As the valve opens, a small amount of oil in the oil chamber passes between the body and the plunger, back to the reservoir.

Valve closing.....As the camshaft rotates, the pressure in the oil chamber decreases, allowing the check ball to open and oil to flow in from the reservoir. Because of the hydraulic pressure and the plunger spring force, the plunger is pushed against the valve stem, maintaining valve clearance at 0 mm (0 in).

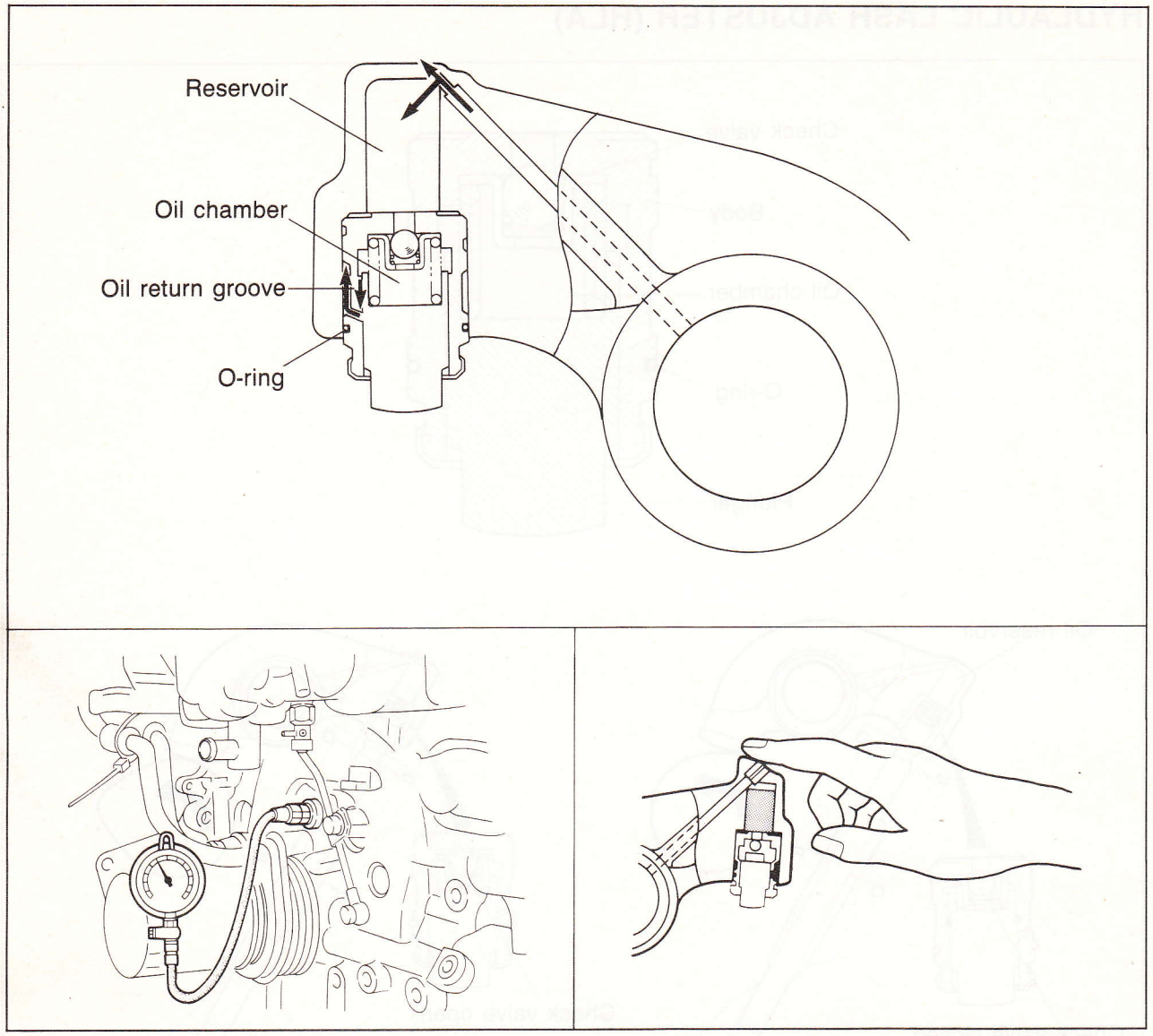

86U01X-516

Oil in Reservoir
Oil is sealed in the reservoir by the O-ring. Oil flowing from the HLA oil chamber is returned to the reservoir through the oil return groove along the outer circumference of the HLA body.
Do not remove the HLA unless necessary, because oil leakage will occur if the O-ring is damaged.

Tappet Noise
Tappet noise may occur if the engine has not been operated for an extended period of time. The noise should stop after the engine has reached normal operating temperature.

Checking the HLA
1. Check the engine oil condition.·····Dirty oil, too much, or too little oil may cause air bubbles in the HLA. Because oil with air can be compressed, the HLA will not work correctly.
2. Check the engine oil pressure.·····Low oil pressure may not allow the HLA plunger to extend fully.
3. Check the HLA movement.·····With the valve closed, push down on the valve side of each rocker arm and confirm that the HLA is not compressed. Replace the HLA if it compress.

Caution: The oil must be changed as outlined in the scheduled maintenance to assure proper operation of the HLA.

PISTON AND CONNECTING ROD

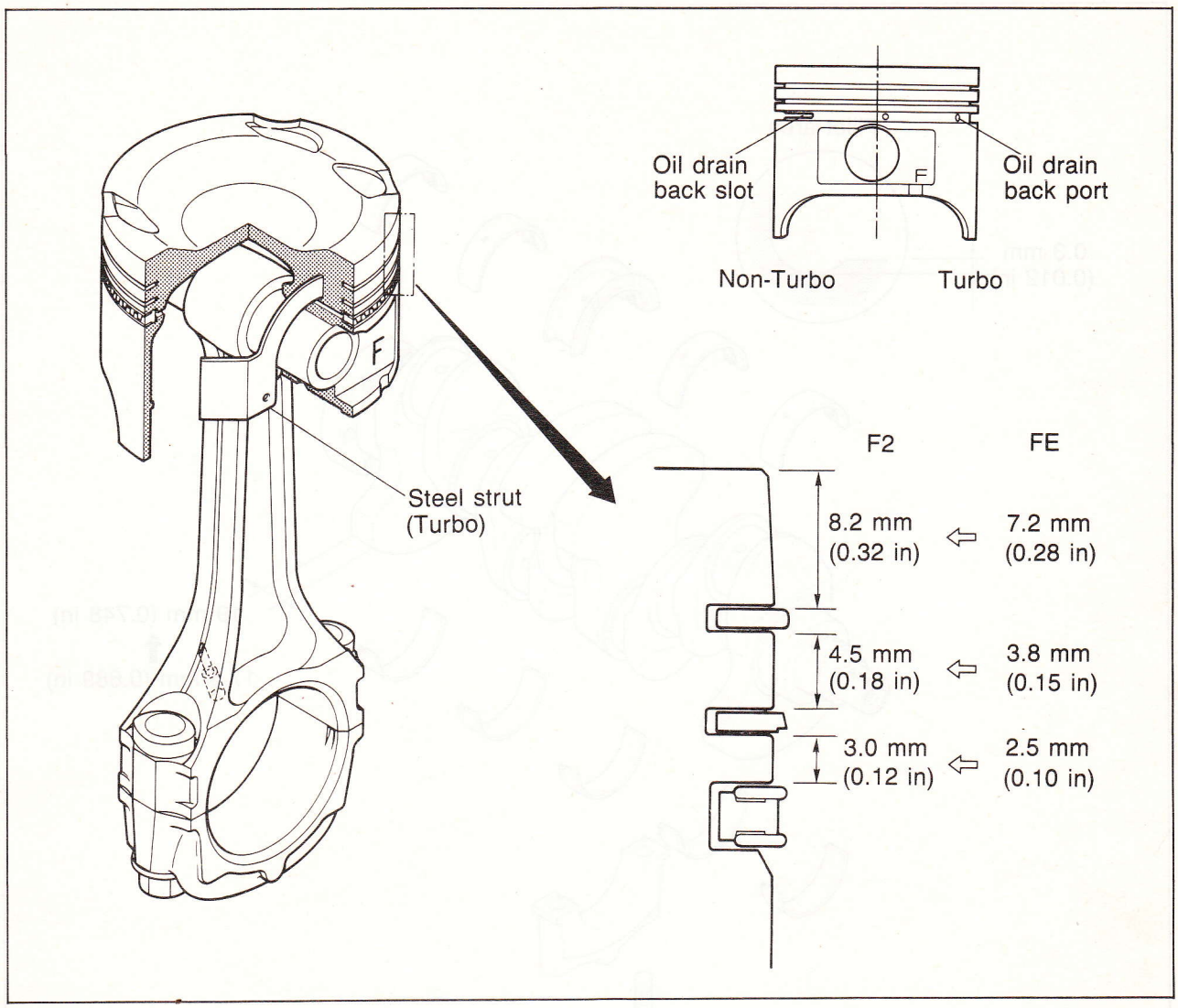

86U01X-512

Piston

The piston is different from that of the FE engine.

1. The amount the piston projects beyond the cylinder block top deck at top dead center is increased by 0.5 mm (0.020 in), and the squish area is reduced. As a result, turbulence within the cylinder is increased, improving combustion efficiency. (Refer to page 1—6.)
2. The land width is increased for improved ability to withstand combustion pressure.

Connecting Rod

The connecting rod is different than that of the FE engine.

1. In conjunction with the longer stroke, the connecting rod is longer to reduce the rod swing angle and piston side-loading.
2. For improved clamping force and connecting rod cap strength, the size and tightening torque of the bolt is increased.

Bolt size: M10
Tightening torque: 65—69 N·m (6.6—7.0 m-kg, 48—51 ft-lb)

CRANKSHAFT

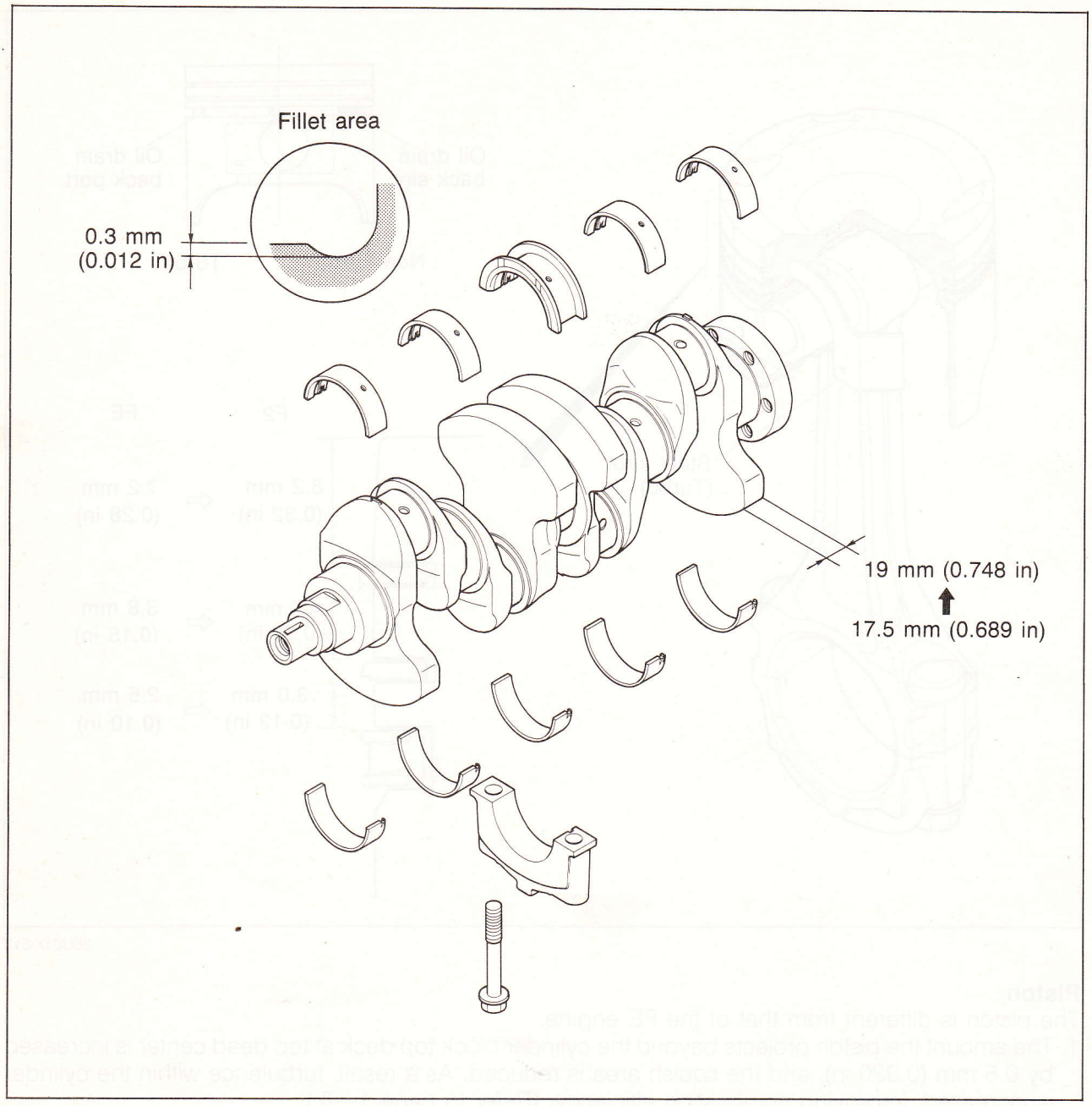

86U01X-513

Crankshaft

The crankshaft is different from that of the FE engine.

1. In conjunction with the longer stroke, the crank pin offset is increased from 43 mm (1.693 in) to 47 mm (1.850 in).
2. For increased inertia weight, the thickness of the counterweights is increased from 17.5 mm (0.689 in) to 19 mm (0.748 in).
3. For increased strength, the fillet areas of the crank pin journals and main journals are rolled.

Main Bearing

From the beginning of production of the F2 engine, the lower main bearings used in the F2 and FE engines have no oil groove, and have less oil clearance to reduce engine noise.

Do not install the lower main bearings in place of the upper main bearings because the main journals and the crank pin journals will not be lubricated.

TIMING BELT

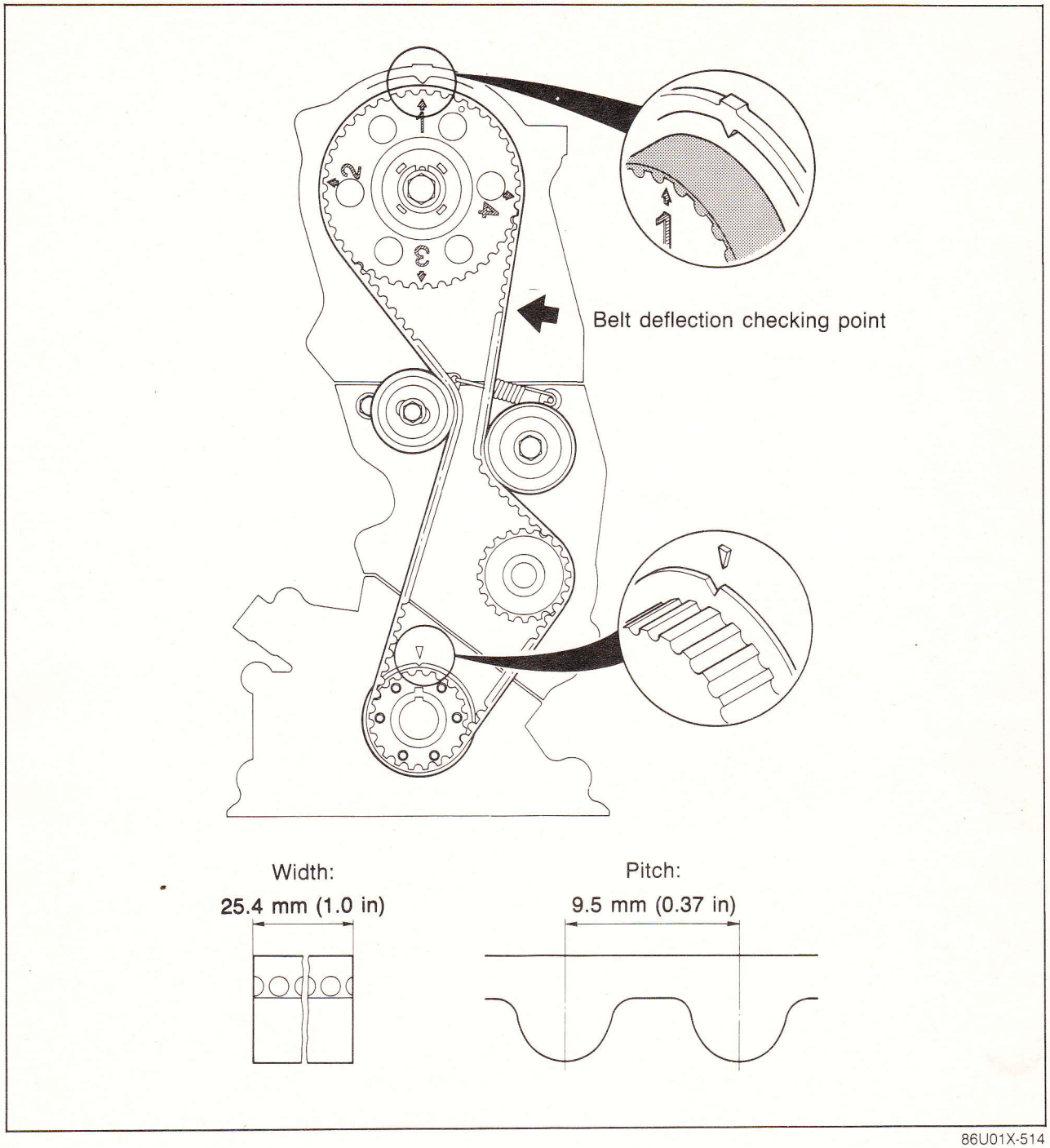

86U01X-514

1. For improved service life of the timing belt, the parts related to the timing belt are redesigned.
   - Timing belt layout is changed.
   - The belt width has been increased from 19.1 mm (0.752 in) to 25.4 mm (1.0 in).
2. The new camshaft pulley has four alignment marks. When used for the F2 engine, the "1" mark is used for alignment.
3. For reduced noise, the tension of the belt tensioner is reduced by use of a weaker spring.

Belt deflection at 98 N (10 kg, 22 lb) force: 7.5—8.5 mm (0.30—0.33 in)