FRONT AND REAR AXLES

86U09X-501

OUTLINE

OUTLINE OF CONSTRUCTION

Driveshaft

The basic construction is the same as that of the previous model, except that the joint size is increased, and the driveshaft installation angle on the ATX model is changed in conjunction with increased power of the engine.

Front Axle and Rear Axle

In addition to the increased size of the front and rear bearings, sealed, maintenance-free, taper roller bearings are employed for both the front and rear axles. The sizes of the bearings are also increased to further improve the durability and serviceability.
In order to cope with the increased load of the rear axle of 4WS models, the material and construction of the knuckle spindle, and the size of the wheel bearing, are different than for the standard model.

86U09X-502

DRIVESHAFT

The type of CV joints for the driveshafts are the same as the previous model.
Wheel side: Birfield
Differential side: MTX Double offset
ATX Tripod

In order to reduce vibration of the body during sudden acceleration from a stop, the differential location is lowered for ATX models so that the driveshaft angle is approximately 4° (previous model: 7°). Tripod type joints are used for ATX models to reduce engine vibrations transmitted to the body during idle, but the constant-velocity-characteristic was not as good when there was a bend angle of the driveshaft.
For that reason, even though vibration is generated during sudden acceleration from a stop, this disadvantage has now been lessened by reducing the bend angle.
For turbo engine models, a large (100 mm dia.) CV joint (non-turbo models: 95 mm dia.) is adopted. The joint shaft is the same as that employed for the previous model, and the lengths of the left and right driveshafts are equal, as before. Torque-steer (the pulling of the steering wheel) during sudden acceleration from a stop is therefore, no problem.
A highly heat-resistant plastic dust seal is used for the bearing of the joint shaft, thus even further improving reliability.
For ABS models, a sensor rotor is pressed on at the wheel side.

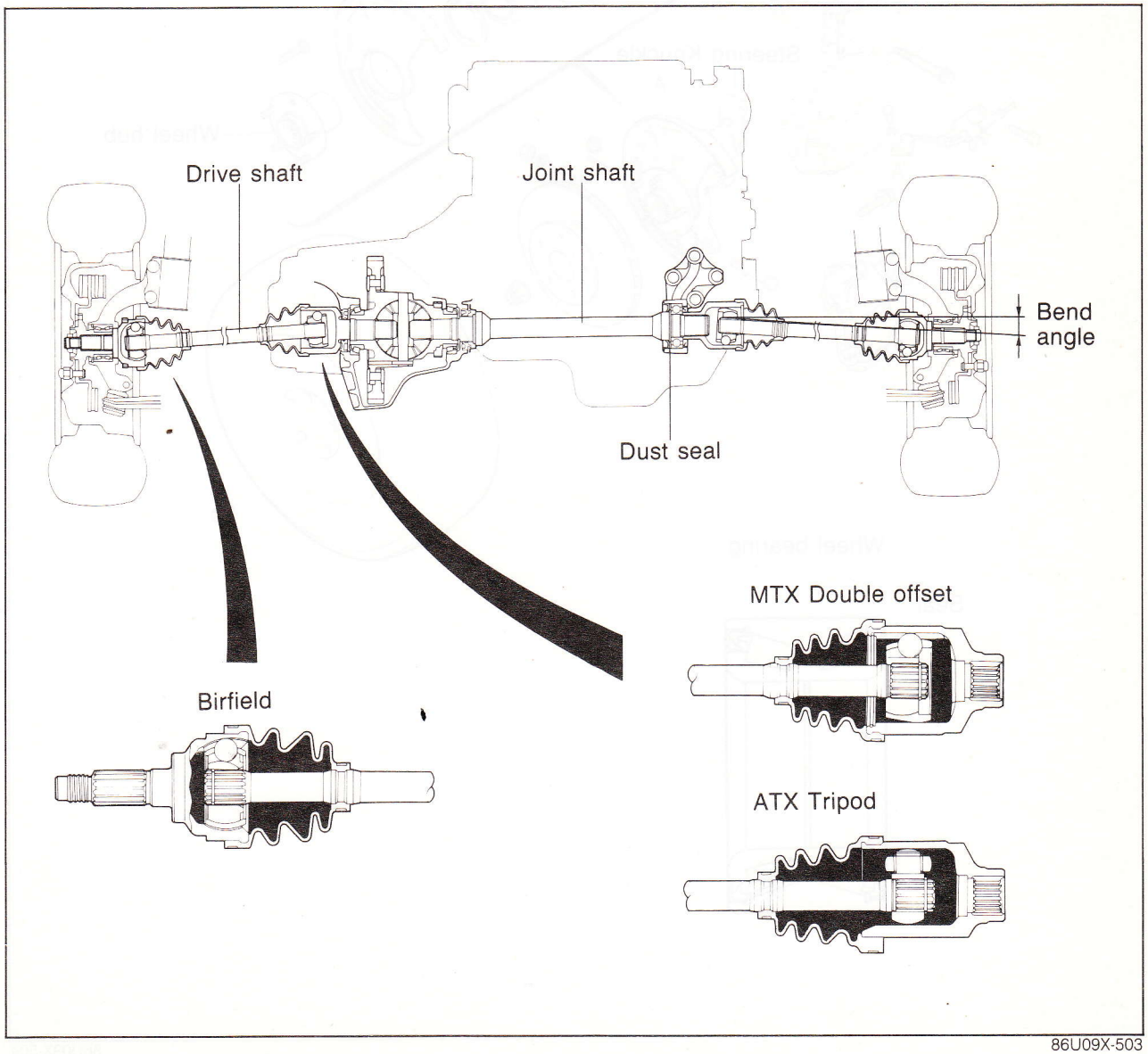

86U09X-503

FRONT AXLE

The front wheel hub and disc plate were previously one unit, but these are now separate in order to improve removal and installation.
For the wheel bearing, the same type sealed bearing as used previously is used, but durability and reliability are improved by increasing the size of the bearing and by changing the bearing seal's sealing point from the outer race to the inner race.

	Outer dia. mm (in)	Inner dia. mm (in)	Width mm (in)
'88 year model	72 (2.83)	42 (1.65)	38 (1.50)
'87 year model	68 (2.68)	39 (1.54)	37 (1.46)

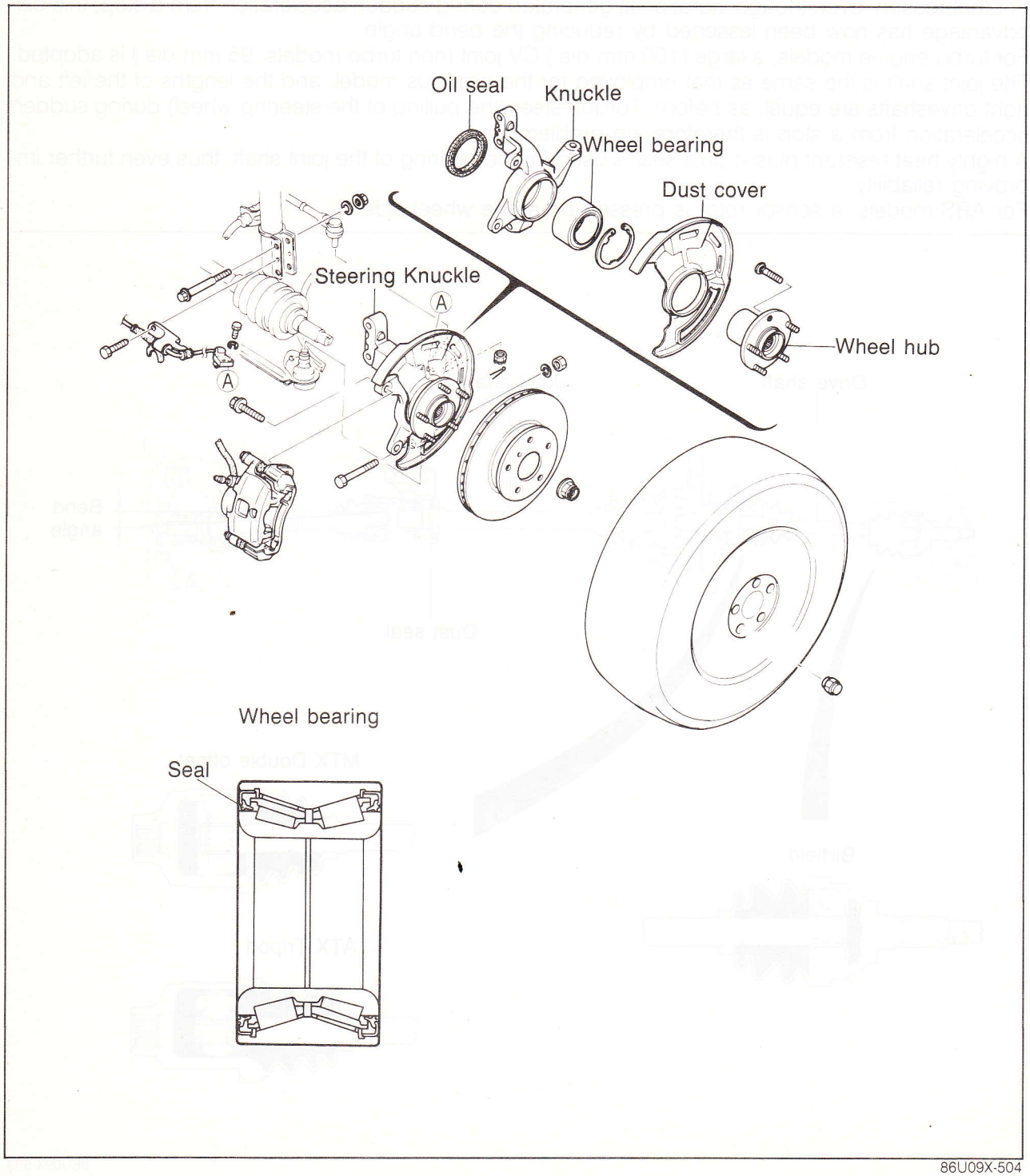

86U09X-504

REAR AXLE

The rear wheel hub is the same as previously used, and is unified with the brake drum (non-turbo models) or the disc plate (turbo models).
A sensor rotor is press-fit onto the hub of models equipped with ABS. The wheel bearing is the same style sealed bearing as is used for the front.
The wheel bearings for 4WS models are large to withstand the forces generated when the rear wheels are turned.

	Outer dia. mm (in)	Inner dia. mm (in)	Width mm (in)
4WS model	64 (2.52)	36 (1.42)	42 (1.65)
Standard model	58 (2.28)	30 (1.18)	42 (1.65)

In order to further improve its strength, the knuckle spindle of 4WS models is a one-piece forged type. The hub spindle used for standard models is the same two-piece cast type as was used previously. (The spindle is press-fit into the hub.)

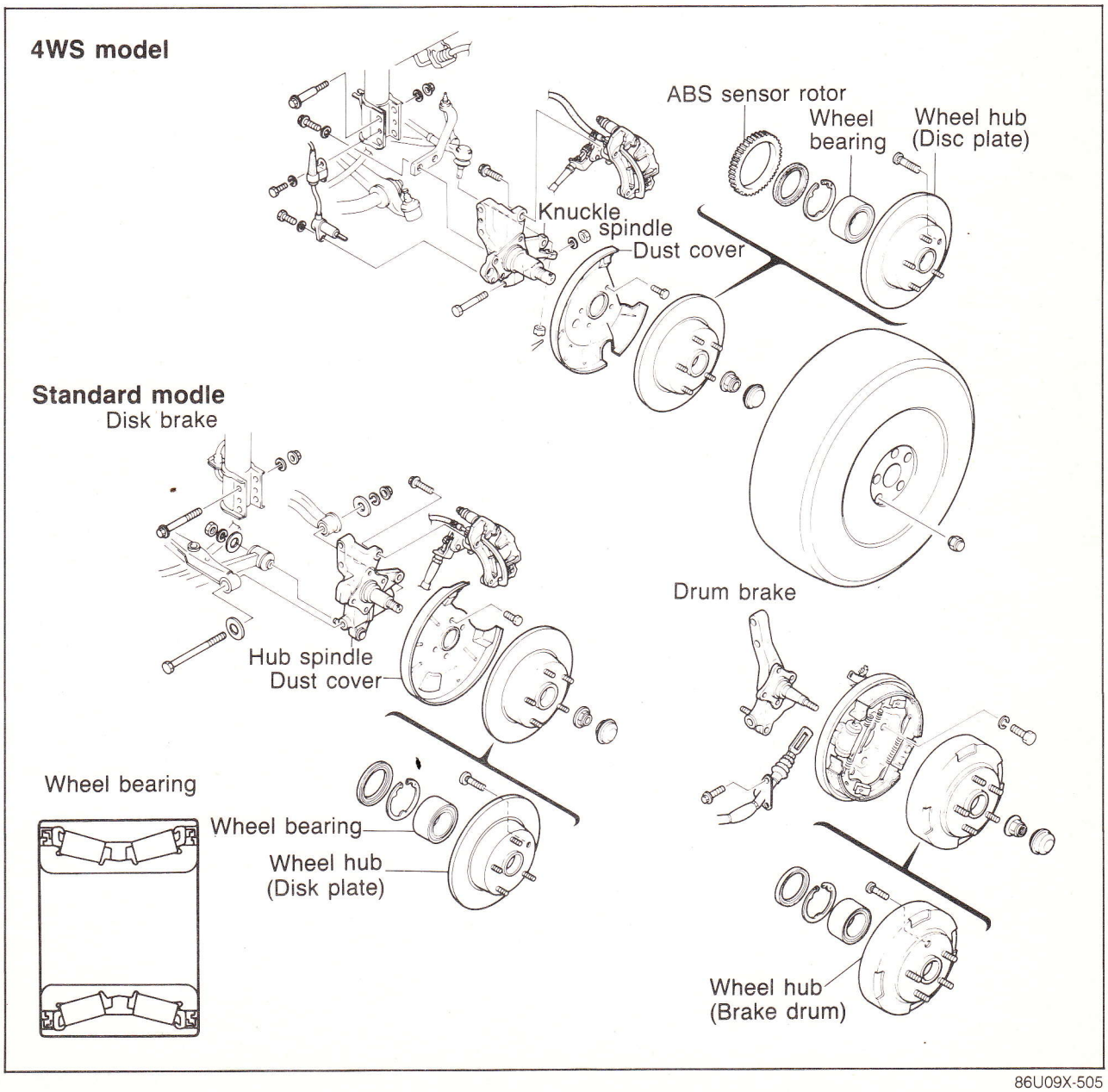

86U09X-505